# ESP32 Certification and Test Guide

Version 1.0

Copyright © 2016

# About This Document

This document provides instructions on how to test ESP32 to meet the certification requirements. The document is structured as follows:

| Chapter | Title | Subject |
|---|---|---|
| Chapter 1 | Overview | Introduction to test procedures. |
| Chapter 2 | Test Preparation | Presentation of test preparations. |
| Chapter 3 | Connecting Device | Instruction on how to connect devices. |
| Chapter 4 | Adaptivity Test | Presentation of adaptivity testing procedures. |
| Chapter 5 | Wi-Fi/BT Operation Commands | Explanation of Wi-Fi/BT operation commands. |

## Release Notes

| Date | Version | Release notes |
|---|---|---|
| 2016.12 | V1.0 | Initial release. |

# Table of Contents


1. Overview ..... 1

2. Test Preparation ..... 2

2.1. Hardware Connection and Configuration ..... 2

2.2. Hardware Boot Mode ..... 2

2.2.1. Download Mode ..... 2

2.2.2. Flash Mode ..... 2

2.3. Antenna Impedance Matching Requirement ..... 2

3. Connecting Device ..... 4

3.1. Serial Port Configuration Tool ..... 4

3.1.1. Tool Introduction ..... 4

3.1.2. Procedure ..... 4

3.1.3. Download Tool ..... 6

3.1.4. Tool Introduction ..... 6

3.1.5. Procedure ..... 6

3.1.6. Configuration Instructions ..... 8

4. Adaptivity Test ..... 9

4.1. Test Tools ..... 9

4.2. Test Steps ..... 9

4.2.1. Downloading the Binaries ..... 9

4.2.2. Connecting ESP32 to AP ..... 9

4.2.3. Ping Packets ..... 10

5. Wi-Fi/BT Operation Command ..... 11

5.1. Wi-Fi Test Commands ..... 11

5.1.1. Selection of the Certification Test Mode ..... 11

5.1.2. Tx Command ..... 11

5.1.3. Tx Stop Command ..... 12

5.1.4. Command for Selecting Tx 11n Mode 20 Mbps or 40 Mbps ..... 12

5.1.5. Rx Command ..... 13

5.1.6. Rx Stop Command ..... 13

5.1.7. SCW Tx Command ..... 13

5.2. BT Test Commands ..... 14

5.2.1. BR/EDR Tx Command ..... 14

5.2.2. LE Tx Command ..... 14

5.2.3. Stop Command ..... 14

5.2.4. Rx Start Command ..... 14

5.2.5. Rx Stop Command ..... 15

5.2.6. SCW Tx Command ..... 15

# 1. Overview

This document intends to give guidance on how to test ESP32 to meet certification requirements. We provide the following two binary files for the tests, as shown in Table 1-1.

**Table 1-1. Test Procedure Binary Files**

| Name | Test Item |
|---|---|
| *ESP32_Adaptivity_20161129.bin* | Adaptivity (baud rate 115200) |
| *ESP32_FCC_WIFI_BT_20161129.bin* | Wi-Fi/BT performance (baud rate 115200) (for 40M crystal oscillator) |

⚠️ ***Notice:***

*Please make sure you distinguish between these two testing procedures. You need to have two testing boards with the relevant two binary files separately installed on them, in order to meet the certification requirements. You can carry out the tests in separate labs simultaneously.*

# 2. Test Preparation

## 2.1. Hardware Connection and Configuration

Please follow the instructions below:

**Table 2-1. Pin Configuration Instruction**

| Pin | Configuration Instruction |
|---|---|
| 3V3/CH_EN | Connects to 3.3V power. |
| RXD/TXD/GND | Lead the three pins out to serial lines for the communication between the PC and ESP32 and for the control of ESP32. |
| GPIO0<br>GPIO2 | These two pins can switch the boot mode of the ESP32. |

## 2.2. Hardware Boot Mode

### 2.2.1. Download Mode

When GPIO0=0, GPIO2=0, ESP32 is in the Download mode and you can download the firmware to the external flash.

### 2.2.2. Flash Mode

When GPIO0=1, ESP32 is in the Flash mode. ESP32 will automatically read and run programs from flash during power on.

> ⚠ ***Notice:***
>
> *Download mode is for downloading the firmware. Flash mode is the normal working mode.*

## 2.3. Antenna Impedance Matching Requirement

For the EMC test, the π impedance matching circuit of the external antenna should meet the following requirements.

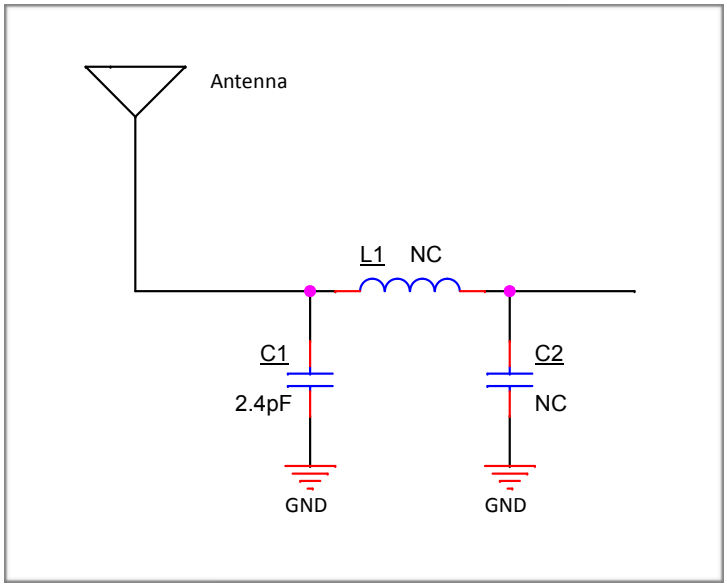


**Figure 2-1. π Impedance Matching Circuit of External Antenna**

> 📖 ***Note:***
>
> *C1 must be a 2.4-pF capacitor. L1, C2, along with C1 perform a 50Ω impedance matching for the Antenna. The value depends on the antenna impedance.*

# 3. Connecting Device

## 3.1. Serial Port Configuration Tool

### 3.1.1. Tool Introduction

> 📖 ***Note:***
>
> *In this chapter a SecureCRT has been used as a serial port configuration tool. Users need to pre-download and install the application.*

SecureCRT can be used for configuring the serial COM port between ESP32 and PC.

### 3.1.2. Procedure

Please follow the steps below.

1. Double-click ***SecureCRT.exe*** to run the application. The system shows the main interface as in Figure 3-1.

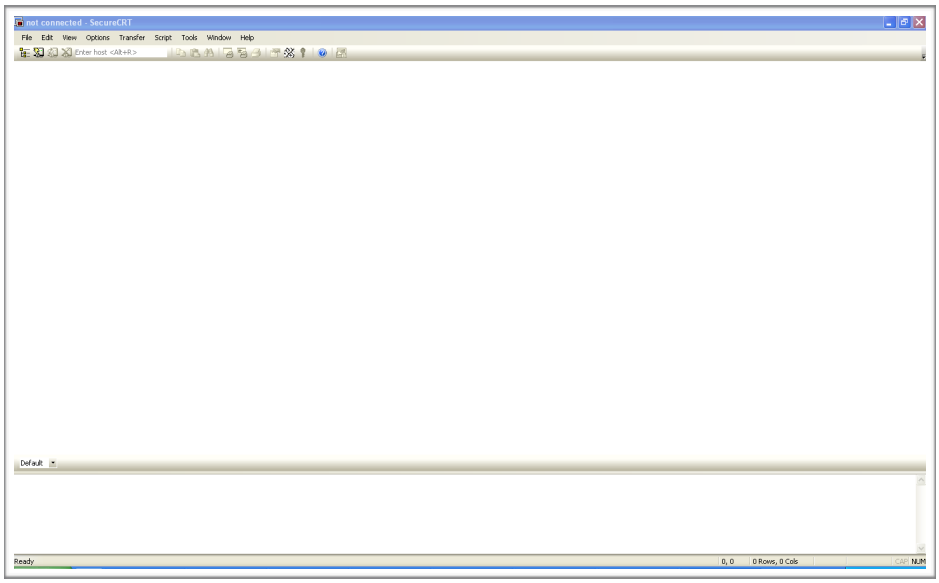


**Figure 3-1. Main Interface of SecureCRT**

2. Select “File >Quick Connect…” or click on the button . The system will then show the “Quick Connect” dialog box.

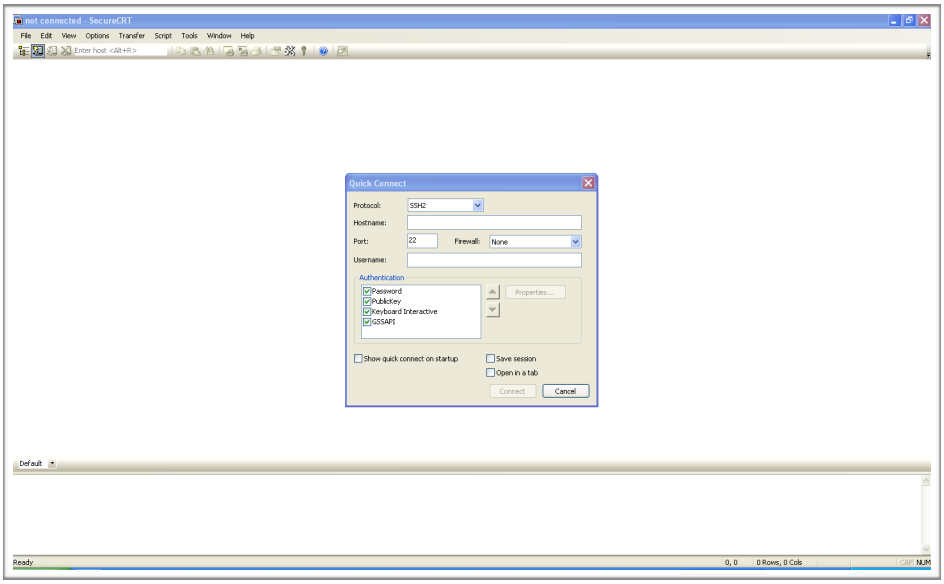


**Figure 3-2. Quick Connect Dialog Box**

3. Select “Serial” in the “Protocol” drop-down menu to select the required configuration options for connecting devices.

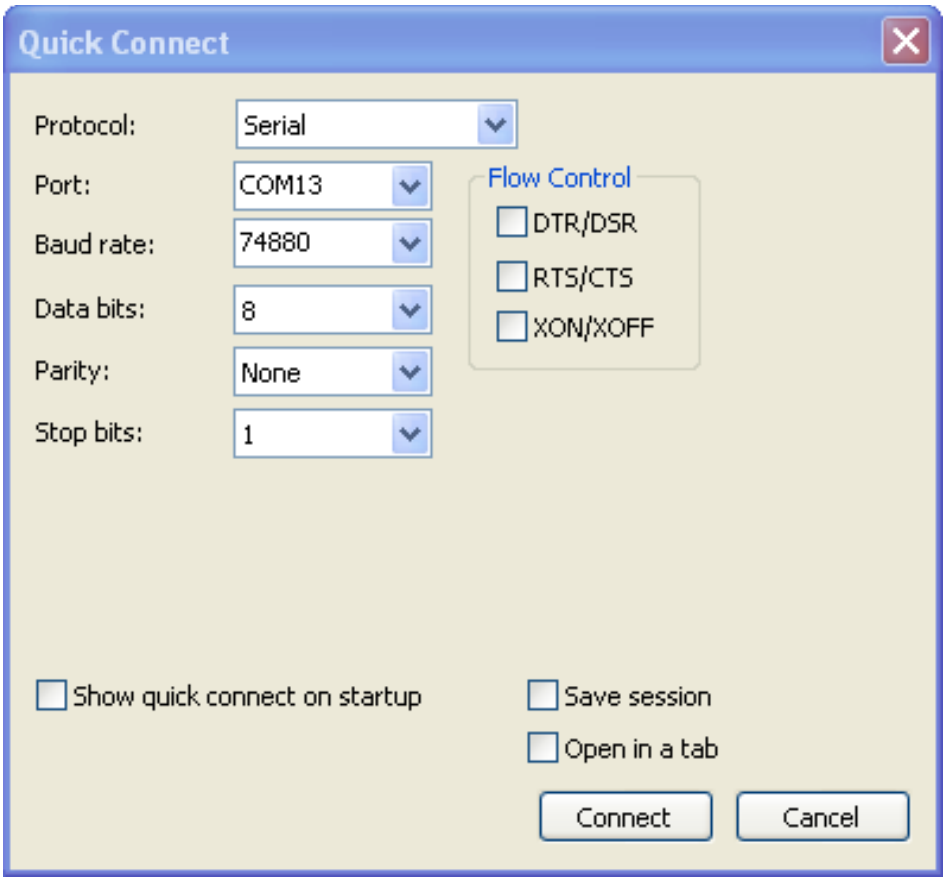


**Figure 3-3. Configuration Options**

| | |
|---|---|
| **Port** | Select a port in the “Port” dropdown menu, such as “COM6”. |
| **Baud Rate** | Type 115200 in the “Baud rate” dropdown menu. |
| **Flow Control** | Deselect “RTS/CTS”. |

4. Click the “Connect” button. A new session of Serial-COM6 has been set up, as Figure 3-4 shows.

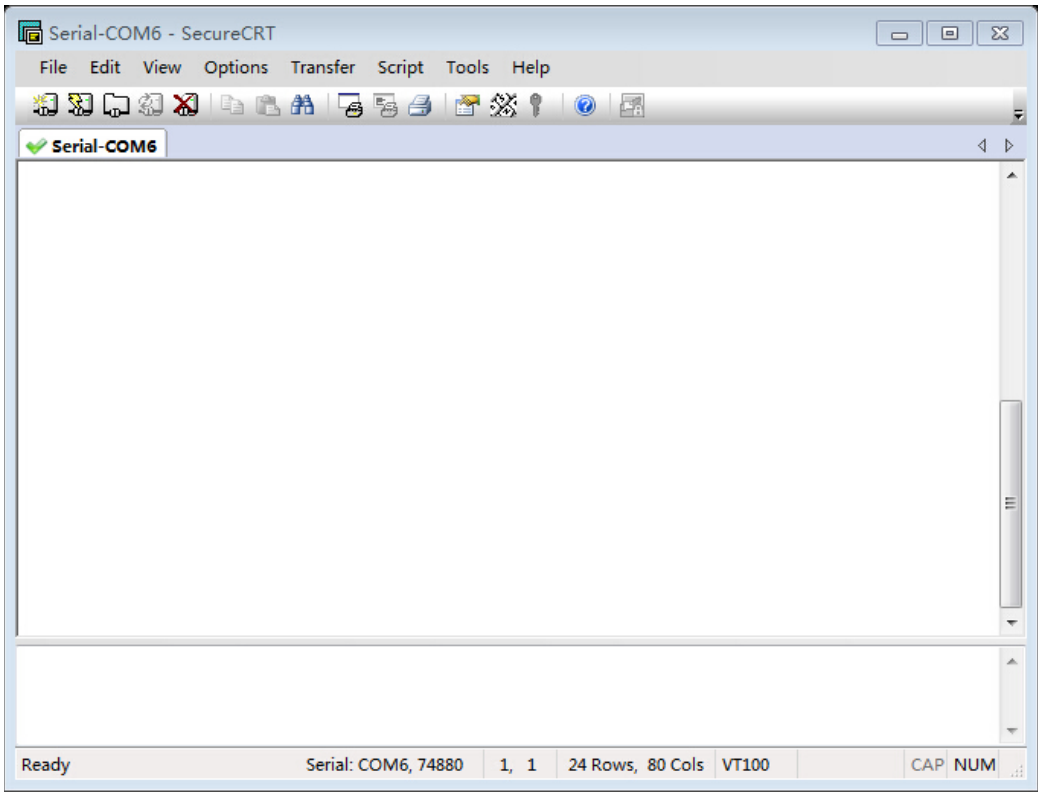


**Figure 3-4. New Session of Serial-COM6**

## 3.1.3. Download Tool

### 3.1.4. Tool Introduction

> 📖 ***Note:***
>
> *The ESP Flash Download Tool (hereinafter termed as Flash Download Tool) has been used in this chapter. You need to download the tool from: http://www.espressif.com/en/support/download/other-tools.*

### 3.1.5. Procedure

Please follow the steps below:

1. Run the Flash Download Tool.
   Make sure ESP32 works in the Download mode and that the port number of the serial port is not used by other applications.
2. Select the file path of the binary file in the “SPIDownload” menu box, and deselect the other paths that you do not use.
   If the path is valid, it appears against a green background; if the path is invalid, then it appears against a red background.
3. Enter the starting address in the OFFSET text box, such as “0X000” or “0x1000”.
   The download addresses of the two binary files that we provide both start from “0X000” or “0x1000”.
4. Configure the respective options according to the specific ESP32 features.
5. Click the “Start” button to download the files.
   If the configuration is incorrect, the Flash Download Tool will show this in the status bar under “Download Panel 1”, and a specific type of error in the command prompt window beside the status bar.
6. After the downloading is complete, the status bar displays “Finish”, as Figure 3-5 shows.

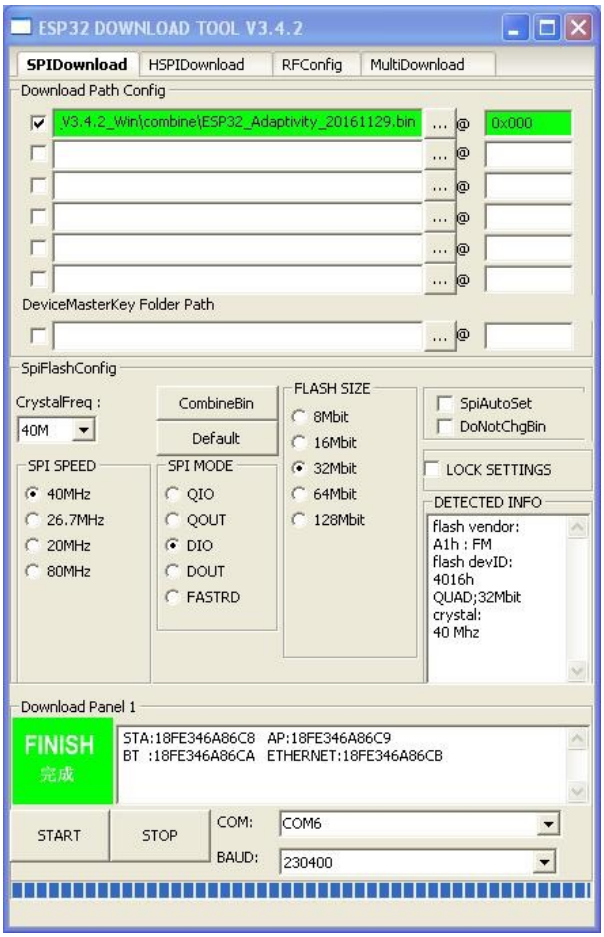


**Figure 3-5. Flash Download Tool**

### 3.1.6. Configuration Instructions

Table 3-1 shows the configuration instructions.

**Table 3-1. Parameter Configuration**

| Option | Description | Configuration Instruction |
|---|---|---|
| CrystalFreq | The type of external crystals | Select the CrystalFreq according to the crystal type that ESP32 is using. Select the option “40M”. |
| CombineBin | Combine the binary files | Combine several binary files into one. |
| SPI Speed | SPI speed | Select the SPI speed of ESP32. The options are: 40 MHz, 26.7 MHz, 20 MHz and 80 MHz. |
| SPI Mode | SPI mode | Select the SPI connecting mode of ESP32. The options are: QIO, QOUT, DIO and DOUT. |
| Flash Size | The size of the flash | Select the flash size that ESP32 uses. |
| COM | The port number of the device | Select the port number of ESP32. |
| Baudrate | Baud rate | Select the downloading speed of the binary file. The default option is 115200. |
| MAC Address | MAC address | After the downloading is complete, the system will show the MAC address where the binary files are saved. |

# 4. Adaptivity Test

## 4.1. Test Tools

- ESP32 module + backplane
- Binaries to download (*ESP32_Adaptivity_20161129.bin*)
- One UART
- A PC with a Windows operating system (and serial port tools installed)
- A network packet-sending tool
- One AP

## 4.2. Test Steps

### 4.2.1. Downloading the Binaries

Table 4-1 shows the download addresses.

**Table 4-1. Download Addresses for the Binaries**

| Binaries | Download Address |
|---|---|
| *ESP32_Adaptivity_20161129.bin* | 0x000 |

> ⚠ ***Notice:***
> *Select DIO for flash_mode.*

### 4.2.2. Connecting ESP32 to AP

Open the serial port tool (set the baud rate to 115200). Input ssc command and connect ESP32 to the specified AP. The connection steps and the corresponding ssc commands are shown below:

**Table 4-2. AP Connection Steps**

| Step | ssc Command |
|---|---|
| 1. Set ESP32 to Station mode. | `op - S -o 1` |
| 2. Connect ESP32 to the specified AP. | `sta -C -s <AP SSID> -p <AP password>` |

> ⚠ ***Notice:***
> *If the AP is open, you only need to input* `sta -C -s <AP SSID>`.

### 4.2.3. Ping Packets

1. Install a network debugging tool on the PC and connect the PC to the same AP to which ESP32 is connected.
2. Run the network debugging tool to set up the UDP server.
3. Input the local IP address and port number on the network debugging tool to complete the configuration.
4. In the serial tool, input the ssc command to connect the socket with the PC or test machine and ping packets.
   - Configure parameter:

     ```
     gpiotmp -C -e 1 -c <value>
     ```

     `value` should be a number between 40 ~ 64; the default value is 50.

     - Example:

       ```
       gpiotmp -C -e 1 -c 50
       ```
   - Configure UDP packets:

     ```
     soc -B -t UDP
     soc -S -s <socket_id> -l <pkt len> -i <server IP _addr> -p
     <server port> -n <pkt num> -j <send pkt delay>
     ```

     - Example:

       ```
       soc -B -t UDP
       soc -S -s 0 -l 5000 -i 255.255.255.255 -p 10004 -n 2000 -j
       10
       ```

# 5. Wi-Fi/BT Operation Command

When testing the EMC/RF item, please download *ESP32_FCC_WIFI_BT_20161129.bin*.

> ⚠️ ***Notice:***
>
> *The case-sensitive commands should be input in the interactive window of SecureCRT. You need to select "Chat Window" in the "View".*

## 5.1. Wi-Fi Test Commands

> 📖 ***Note:***
>
> *The baud rate is 115200.*

### 5.1.1. Selection of the Certification Test Mode

- Command for the RF certification mode: `fcc_mode_sel  2`

  Print: `fcc_mode_sel=2, RF test start!!!`
- Command for the EMC certification mode: `fcc_mode_sel  1`

  Print: `fcc_mode_sel=1,EMC Certification start!!!`
- Command for the FCC certification mode: `fcc_mode_sel  0`

  Print: `fcc_mode_sel=0, FCC Certification start!!!`

### 5.1.2. Tx Command

`wifitxout` <Parameter1> <Parameter2> <Parameter3>

<Parameter1>: Select the Tx channel from 1 ~ 14.

<Parameter2>: Select the Tx data rate according to Table 5-1.

<Parameter3>: Tx power attenuation. An 8-bit signed operand. The unit is 0.25 dB. For example, 4 means an attenuation of 1 dB.

Table 5-1. Parameter2 and Tx Data Rate

| 11b | | 11g | | 11n | |
|---|---|---|---|---|---|
| Parameter | Data rate | Parameter | Data rate | Parameter | Data rate |
| 0x0 | 1 Mbps | 0xb | 6 Mbps | 0x10 | 6.5 Mbps / MCS0 |
| 0x1 | 2 Mbps | 0xf | 9 Mbps | 0x11 | 13 Mbps / MCS1 |
| 0x2 | 5.5 Mbps | 0xa | 12 Mbps | 0x12 | 19.5 Mbps / MCS2 |
| 0x3 | 11 Mbps | 0xe | 18 Mbps | 0x13 | 26 Mbps / MCS3 |
| - | - | 0x9 | 24 Mbps | 0x14 | 39 Mbps / MCS4 |
| - | - | 0xd | 36 Mbps | 0x15 | 52 Mbps / MCS5 |
| - | - | 0x8 | 48 Mbps | 0x16 | 58.5 Mbps / MCS6 |
| - | - | 0xc | 54 Mbps | 0x17 | 65 Mbps / MCS7 |

> ⚠ ***Notice:***
> *After sending data packets, you need to input the Stop command to end the process.*

- Example:

  `wifitxout 1 0x0 0`

  Print: `Wifi tx out: channel=1, rate=0x0, BK=0`

  Send the packets through channel 1 (2412 MHz) with a data rate of 1 Mbps.

### 5.1.3. Tx Stop Command

`cmdstop`

Print: `Tx Over`

> ⚠ ***Notice:***
> *After sending data packets, you need to input the Stop command to switch the channel or data rate.*

### 5.1.4. Command for Selecting Tx 11n Mode 20 Mbps or 40 Mbps

`tx_cbw40m_en <Parameter1>`

- Command for selecting the 11n HT20 mode:

  `tx_cbw40m_en 0`

  Print: `tx_cbw40m_en: 0`

- Command for selecting the 11n HT40 mode:

  `tx_cbw40m_en 1`

  Print: `tx_cbw40m_en: 1`

### 5.1.5. Rx Command

`esp_rx` <Parameter1> <Parameter2>

<Parameter1>: Select the Rx channel from 1 ~ 14.

<Parameter2>: Select the Rx data rate according to Table 5-1.

> ⚠ ***Notice:***
> *After receiving data packets, you need to input Stop command to end the process.*

- Example:

  `esp_rx  1  0x0`

  Print: `wifi rx start: channel is 1, rate is 0x0`

  Receive the packets in channel 1 (2412 MHz) with a data rate of 1 Mbps.

### 5.1.6. Rx Stop Command

`cmdstop`

Print: `Correct: 0 Desired: 0 RSSI: 0`

`Correct` indicates the number of received packets.

`Desired` indicates the number of received packets with the corresponding data rate of <Parameter2>.

`RSSI` indicates the average power of the `Desired` packets received.

### 5.1.7. SCW Tx Command

`wifiscwout` <Parameter1> <Parameter2> <Parameter3>

<Parameter1>: SCW Tx enable signal, 1 = send; 0 = stop.

<Parameter2>: Select the SCW Tx channel from 1 ~ 14.

<Parameter3>: SCW power attenuation. The unit is 0.25 dB. For example, 4 indicates an attenuation of 1 dB.

Example:

- SCW Tx example:

  `wifiscwout  1  14  0`

  Print: `wifi single carrier tx out`

  Transmit SCW in channel 14 (2484 MHz)

- SCW Tx stop example:

  `wifiscwout  0  14  0`

  Print: `wifi single carrier tx stop`

  Stop SCW transmission.

## 5.2. BT Test Commands

> 📖 ***Note:***
>
> *Baud rate is 115200.*

### 5.2.1. BR/EDR Tx Command

`fcc_bt_tx` <Parameter1> <Parameter2> <Parameter3> <Parameter4> <Parameter5>

<Parameter1>: Tx power attenuation. The range is 0 ~ 9. The unit is 2 dB. Normally the value is 4.

<Parameter2>: Frequency modulation enable. 1: enable; 0: disable.

<Parameter3>: Select the Tx channel. Input channel number 0 ~ 78.

<Parameter4>: Select the modulation mode. 1: 1M; 2: 2M; 3: 3M.

<Parameter4>: Select the DH type. 1: DH1; 3: DH3; 5: DH5.

### 5.2.2. LE Tx Command

`fcc_le_tx` <Parameter1> <Parameter2> <Parameter3>

<Parameter1>: Tx power attenuation. The range is 0 ~ 9. The unit is 2 dB. Normally the value is 4.

<Parameter2>: Select the Tx channel. Input channel number 0 ~ 39.

<Parameter3>: Select the payload length. The range is 0 ~ 255. The unit is byte. Normally the value is 250.

### 5.2.3. Stop Command

`cmdstop`

### 5.2.4. Rx Start Command

`rw_rx_per` <Parameter1> <Parameter2>

<Parameter1>: 0: BR; 1: EDR.

<Parameter2>: Select the Rx channel from 0 ～ 78. 0 to 39 represent even-numbered channels, and 40 to 78 represent odd-numbered channels. For example, if Parameter2 is 0, channel 0 is selected; if Parameter2 is 1, channel 2 is selected; if Parameter2 is 2, channel 4 is selected, and so on. So if Parameter2 is 39, channel 78 is selected. In contrast, if Parameter2 is 40, channel 1 is selected; if Parameter2 is 41, channel 3 is selected; if Parameter2 is 42, channel 5 is selected, and so on. So if Parameter2 is 78, channel 77 is selected.

Input `cmdstop` command to stop receiving packets and the serial port will print the number of packets received.

The format of the printed number of received packets is 0 0 0 0 0 0 0 0 w 0 0 0 0 0 0 0 0 p 0 0 0.

The second digit represents the number of packets received in this process.

### 5.2.5. Rx Stop Command

`cmdstop`

### 5.2.6. SCW Tx Command

`bt_tx_tone` <Parameter1> <Parameter2> <Parameter3>

<Parameter1>: SCW Tx enable signal, 1 = send; 0 = stop.

<Parameter2>: Select the SCW Tx channel from 0 ~ 78.

<Parameter3>: SCW power attenuation. The unit is 0.25 dB. For example, 4 indicates an attenuation of 1 dB.

- SCW Tx example:

  `bt_tx_tone  1  0  0`

  Print: `BT TX TONE START!`

  Transmit SCW in channel 14 (2402 MHz)

- SCW Tx stop example:

  `bt_tx_tone  0  0  0`

  Print: `BT TX TONE STOP!`

  Stop SCW transmission.

Espressif IOT Team

*www.espressif.com*

**Disclaimer and Copyright Notice**

Information in this document, including URL references, is subject to change without notice.

THIS DOCUMENT IS PROVIDED AS IS WITH NO WARRANTIES WHATSOEVER, INCLUDING ANY WARRANTY OF MERCHANTABILITY, NON-INFRINGEMENT, FITNESS FOR ANY PARTICULAR PURPOSE, OR ANY WARRANTY OTHERWISE ARISING OUT OF ANY PROPOSAL, SPECIFICATION OR SAMPLE.

All liability, including liability for infringement of any proprietary rights, relating to use of information in this document is disclaimed. No licenses express or implied, by estoppel or otherwise, to any intellectual property rights are granted herein.

The Wi-Fi Alliance Member logo is a trademark of the Wi-Fi Alliance. The Bluetooth logo is a registered trademark of Bluetooth SIG.

All trade names, trademarks and registered trademarks mentioned in this document are property of their respective owners, and are hereby acknowledged.

**Copyright © 2016 Espressif Inc. All rights reserved.**